ARISTON

SPARE PARTS EXPLODED VIEW
STORAGE ELECTRIC WATER HEATERS

Model

LEXIS

R8218502-04 - 23/10/2020

EN	FR	IT	ES	DE	NL

LEXIS

Storage Electric Water Heaters

Col	Reference	Model type	Begin	End
1	3626309	LEXIS 50	03-2020	-
2	3626310	LEXIS 80	03-2020	-
3	3626311	LEXIS 100	03-2020	-

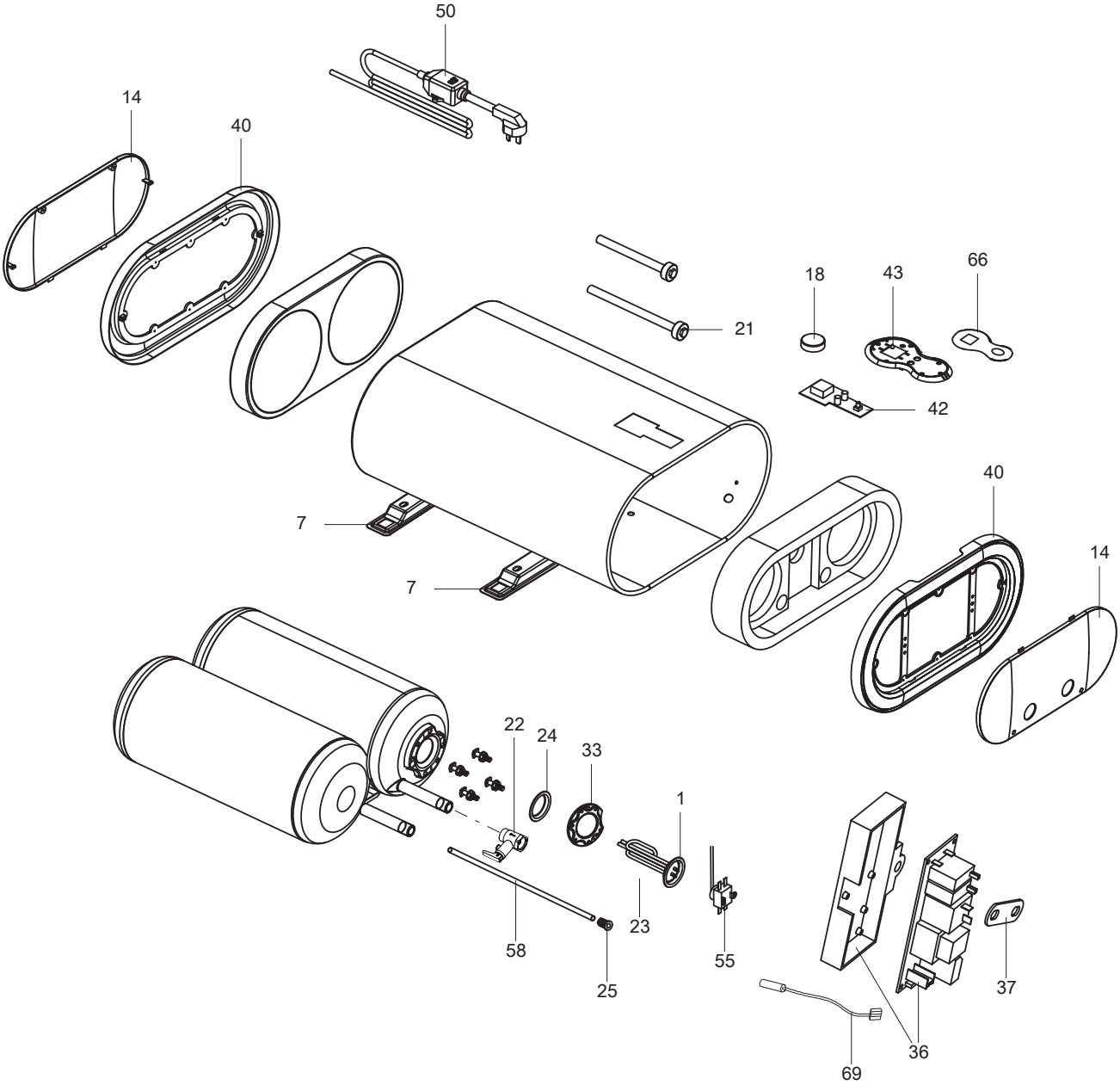
50
14
40
18
43
66
21
42
40
7
14
7
22
24
33
1
58
23
55
25
37
36
69

	Description	Manf. Pt. N	Type	LEXIS 50	LEXIS 80	LEXIS 100	4	5	6	7	8	9	10	11	12	13	14	15	16	17	18	From	to
0001	НАГРЕВАТЕЛЬНЫЙ ЭЛЕМЕНТ 2000W 230V	65180420		●	●	●																	
0007	КРОНШТЕЙН	65180409		●	●	●																	
0014	ИНСПЕКЦИОННАЯ КРЫШКА	65180407		●																			
	ИНСПЕКЦИОННАЯ КРЫШКА	65180425			●	●																	
0018	РУЧКА РЕГУЛИРОВКИ	65180411		●	●	●																	
0021	МАГНИЕВЫЙ АНОД D:13,5 L:140 WITH NUT	65180433		●																		04/20	
	МАГНИЕВЫЙ АНОД D:13,5 L:180	65180424		●																			03/20
	МАГНИЕВЫЙ АНОД D:20 L:200	65180428			●	●																	03/20
	МАГНИЕВЫЙ АНОД D:20 L:200 WITH NUT	65180434			●	●																04/20	
0022	ПРЕДОХРАНИТЕЛЬНЫЙ КЛАПАН (1/2" 6 БАР)	65180432		●	●	●																	
0023	МАГНИЕВЫЙ АНОД D:13,5 L:140	65180414		●	●	●																	
0024	О-КОЛЬЦО	65180419		●	●	●																	
0025	УПЛОТНИТЕЛЬНАЯ ВТУЛКА	65180417		●	●	●																	
0033	ПРОКЛАДКА ФЛАНЦА	65180422		●	●	●																	
0036	ОСНОВНАЯ ПЛАТА	65180415		●	●	●																	
0037	КРОНШТЕЙН ОСНОВНОЙ ПЛАТЫ	65180416		●	●	●																	
0040	КРЫШКА ПЛАСТИКОВАЯ	65180408		●																			
	КРЫШКА ПЛАСТИКОВАЯ	65180426			●	●																	
0042	ПЛАТА ДИСПЛЕЯ	65180413		●	●	●																	
0043	ПАНЕЛЬ УПРАВЛЕНИЯ	65180412		●	●	●																	
0050	КАБЕЛЬ ПИТАНИЯ С УЗО (1.57m - 8.7A)	65180410		●	●	●																	
0055	ТЕРМОСТАТ БЕЗОПАСНОСТИ	65180418		●	●	●																	
0058	ТРУБКА ВЫХОДА ГОРЯЧЕЙ ВОДЫ	65180423		●																			
	ТРУБКА ВЫХОДА ГОРЯЧЕЙ ВОДЫ	65180427			●	●																	
0066	НАКЛЕЙКА ПАНЕЛИ УПРАВЛЕНИЯ	65180421		●	●	●																	
0069	ДАТЧИК ТЕМПЕРАТУРЫ	65180440		●	●	●																	

LIST OF THE ABBREVIATIONS

HW	:	Hot water.
CW	:	Cold water.
C	:	Ceramic resistance (normal heating).
Ca	:	Ceramic resistance (accelerated heating)
TP	:	Immersion heater.
1F	:	With fittings.
2F	:	Without fittings.
3F	:	With fittings and another outlet connection.
AMI	:	With mixing valve.
SMI	:	Without mixing valve.
PUISS	:	Power of th appliance.
PN	:	Appliance with normal pression.
LP	:	Appliance with low pression.
PV	:	Appliance with variable power.
PF	:	Appliance with fixed power.

IDENTIFICATION PLATE

SERIAL NUMBER

6 Characters : 03 09 08
- Year of manufacture
- Manufacturing day
- Month of manufacture

9 Characters : 5 9 12 0606
- Year of manufacture
- Month of manufacture
- Sequencial number

14 Characters : SI-V-0B0 45 07 0001
- Sequencial number
- Year of manufacture : 6 → 2004, 7 → 2005, 8 → 2006, etc ...
- Month of manufacture : 25 → January, 13 → February, 32 → March, 35 → April, 39 → May, 45 → June, 43 → July, 29 → August, 40 → September, 38 → October, 51 → November, 12 → December
- Product model

14 Characters : 111518 XX 000010
- Month of manufacture
- Day of manufacture
- Sequencial number
- Year of manufacture

15 Characters : 02 11 00001 007843
- Year of manufacture
- Month of manufacture
- Product reference
- Sequencial number

21 Characters : 3200050 XX 08115 0000001
- Product reference
- Sequencial number
- Year (08) / Manufacturing day (115)

22 Characters : 3200050 XX 070115 0000001
- Product reference
- Sequencial number
- Year (07) / Month (01) / Manufacturing day (15)

The indications mentionned on the prices, commercial or technical literature and the scheme are written for your guidance and are available at a given time. The CONSTRUCTOR retains the power to modify the presentation, the form, the size, the conception or the material of the products.